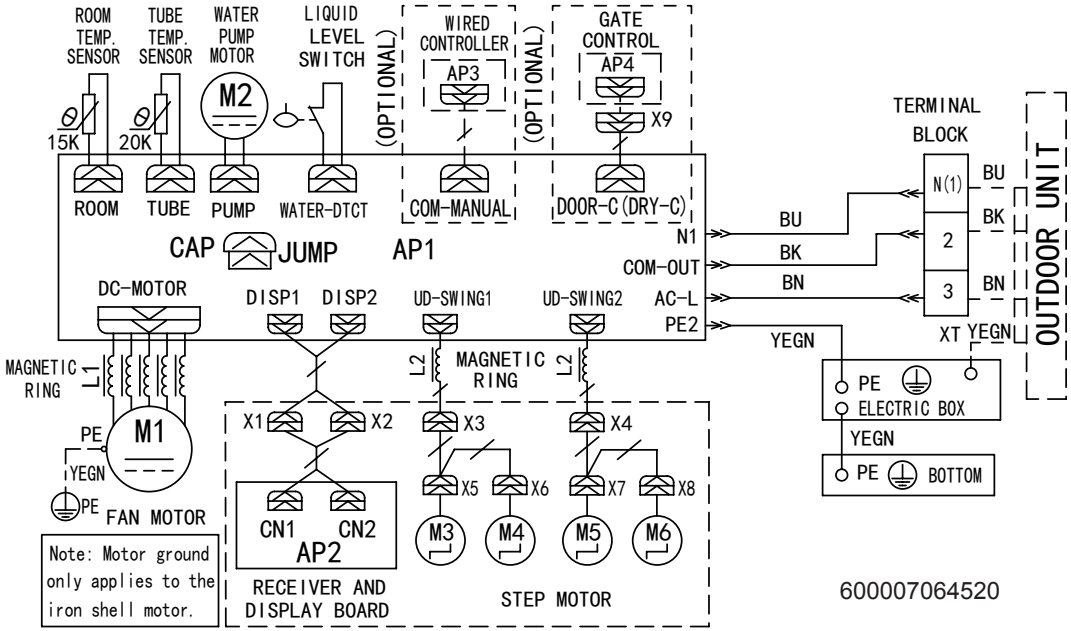

Model:	ALPICAIR
ACMI-70HRDC1A	
Electrical Drawing	